STUDIO BAGNO

Ritual

Collection Atelier

STYLE

Bench

CODE

SB00421

WEIGHT

4.3KG

COLOURS

Black Terrazzo

ARTISAN METHOD

Individually Hand Applied Decal. Twice Fired.

INCLUSIONS

32mm Plug & Waste not included.

Non-Overflow

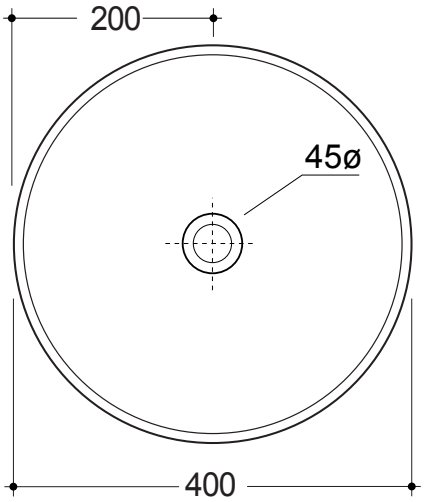

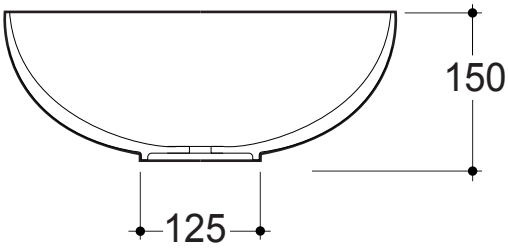

Note: All dimensions are in millimetres and are subject to normal manufacturing variances. Studio Bagno Pty Ltd reserves the right to vary specifications at any time without notice. **Date created:** 11/06/13.