Water Secure Co

# Specifications

**DESCRIPTION**
- Smart home water monitoring and leak detection system

**OPERATION**
- Remote, automatic, and manual water on/off (shut-off) capability
- WiFi enabled device for smartphone connectivity
- Smartphone app available for iOS and Android that provides the following:
  - •Proactive maintenance alerts (i.e. leak alert, pressure alerts, etc.)
  - •Remote water control and shut-off
  - •Set water consumption goals and monitor water usage
  - •Set system modes (home, away, sleep)
  - •See real-time flow, pressure, and temperature readings
  - •Run manual leak detection tests "Health Tests"
- Works with Amazon Alexa, Google Assistant and Control4

**FLOW**
- Maximum operating pressure of 175 psi

**STANDARDS**
- Australian WaterMark Certificate number # 022736
- Smart Home Water Security System third party certified by: IAPMO IGC-349-2017 and all applicable requirements referenced therein
- UL 1951, CSA C22.2 Nos. 14 and 68
- Certified to NSF 61/9 & 372
- Third party certified to meet FCC part 15 Class B (power adapter)
- Third party certified to meet Industry Canada RSS-210
- UL 60950, UL 1310, CSA C22.2 #223, CE EN 60950
- UL 1951, CSA C22.2 No. 68, CSA C22 No.14
- FCC ID: PU5900-001 to CFR 47 Part 15 Subpart C (Flo by Moen device)
- IPX5 (protection from sprayed jets in any direction)

**WARRANTY**
- Flo Technologies warrants that the product will be free from defects in materials and workmanship for a period of one (1) year from the date of delivery following the original retail purchase
- Extended product warranty available through FloProtect plan

Visit www.watersecureco.com.au for complete details and limitations

**Installation Notes:**
- Install product following the installation guide
- Must be installed on accessible main water supply line (cold water line) that is 1 inch diameter (can be installed on 1.25 inch diameter or smaller)
- Must be installed after water meter, water shut-off, and pressure regulating valve (if applicable)
- Power supply and device must not be installed where the ambient temperature can exceed 140 deg F (60 deg C) or below 32 deg F (0 deg C)
- Requires electrical outlet (100-240VAC-50/60 Hz) with continuous power within 10 feet of device
- Requires WiFI network (WLAN connectivity/IEEE 802.11bgn, 2.4 GHz range)
- Smartphone (iPhone or Android) with installed app required

**For Well Pump System Installations:**
- When installed on well or irrigation water service lines, the device should be placed after (downstream) of all treatment and filtration components to avoid debris interference. It should also be installed after the well pump and water storage tank. If it is necessary to install the device prior to a water filtration system, a wye strainer with a 100 mesh or finer screen and blow-down port is required to catch any sediment or particles from the ground source or casing. The mesh screen in the strainer may require periodic maintenance.

## Flo by Water Secure Co
## 20mm Smart Home Water Monitoring and Leak Detection System
**Model:** 900-003AU

flo BY Water Secure Co

20mm
(25mm on request)

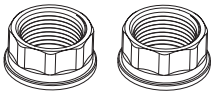

Tailpieces (Included)

C5 AC Adapter
(included)

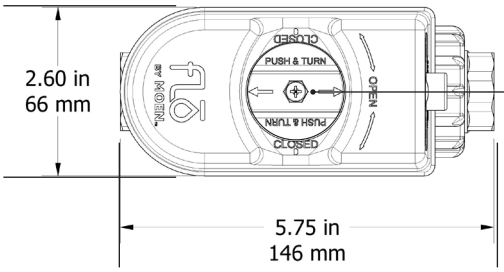


Backup Shutoff

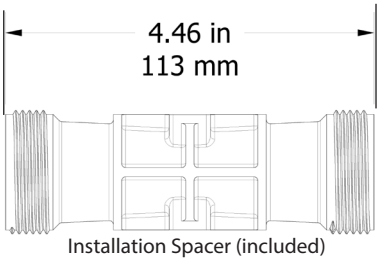


Installation Spacer (included)

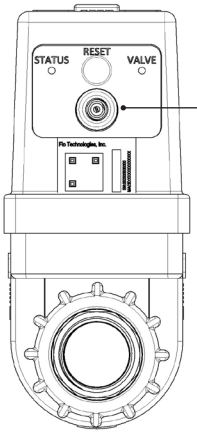


Power Input

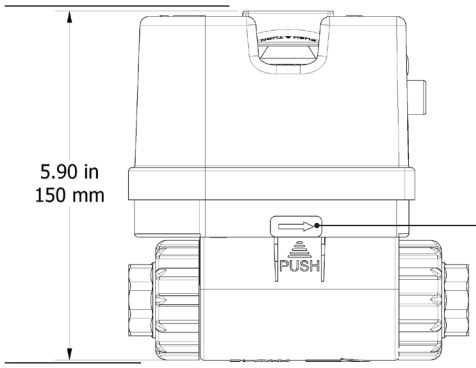


Water Flow Direction

## CRITICAL DIMENSIONS

(DO NOT SCALE)

Included with product: 25mm NPT threaded brass tailpieces (x2), AC adapter (12 VDC, 100-240VAC-50/60 Hz) with 3m cable (x1), spare o-rings (x2), installation spacer (x1), 5/16" hex key

**FOR MORE INFORMATION CALL: 1800 354 635**
**www.watersecureco.com.au**

Water Secure Co

# Specifications

## Flo by Water Secure Co
### Smart Water Detector

**Models:** 920-004 (1 pack)
920-005 (3 pack)

**DESCRIPTION**
- Smart home water detector monitoring moisture, humidity, and room temperature.

**OPERATION**
- Can be used as a standalone detector or in conjunction with the Flo by Moen Smart Water Shutoff (option in the mobile app to trigger automatic water shutoff to a home if the detector detects moisture and a smart water shutoff is installed on the home's main water line)
- Wi-Fi enabled device for smartphone connectivity (WLAN connectivity / IEEE 802.11 bgn, 2.4 GHz range)
- Smartphone app available for iOS and Android that provides customizable alerts for:
  - -Moisture Detection through base unit or included remote sensing disc
  - -Humidity Range: customizable between 0-100% Relative Humidity (RH)
  - -Room Temperature: customizable between 0 to 140 deg F / -18 to 60 deg C
  - -Battery Level: customizable between 0-100%
- Automatic water shutoff feature: if a detector senses moisture, it can trigger the smart water shutoff to close (only available if the Flo by Moen smart water shutoff is installed on the main water supply line)
- Battery type: CR123A Lithium Cell (lasts up to 2 years, included with detector)
- Operating Temperature Range: -20 to 140 deg F / -29 to 60 deg C

**INSTALLATION NOTES**
- Detector can be placed directly on the floor without the wall mount base attached.
- With the wall mount base attached to detector and 48" (122 cm) remote sensing disc connected to wall mount base, detector can be mounted on a wall or baseboard and the remote sensing disc can be placed in low profile/hard-to-reach areas to monitor for moisture.
- Optional 6' (1.8 m) Leak Sensing Cable that detects water at any point along the cable (SKU sold separately: 920-006) (up to 3 cables can be linked together for further leak sensing).

**STANDARDS**
- Third party certified to meet Industry Canada RSS-210 IC ID: 25926-920004.
- FCC ID: 2AU5H-920004 to CFR 47 Part 15 Subpart C.

**WARRANTY**
- Flo Technologies warrants that the product will be free from defects in materials and workmanship for a period of one (1) year from the date of delivery following the original retail purchase.
- Visit www.support.meetflo.com for complete details and limitation.

* Supplier agrees to comply with all applicable laws and regulations when shipping the materials.

flō BY Water Secure Co

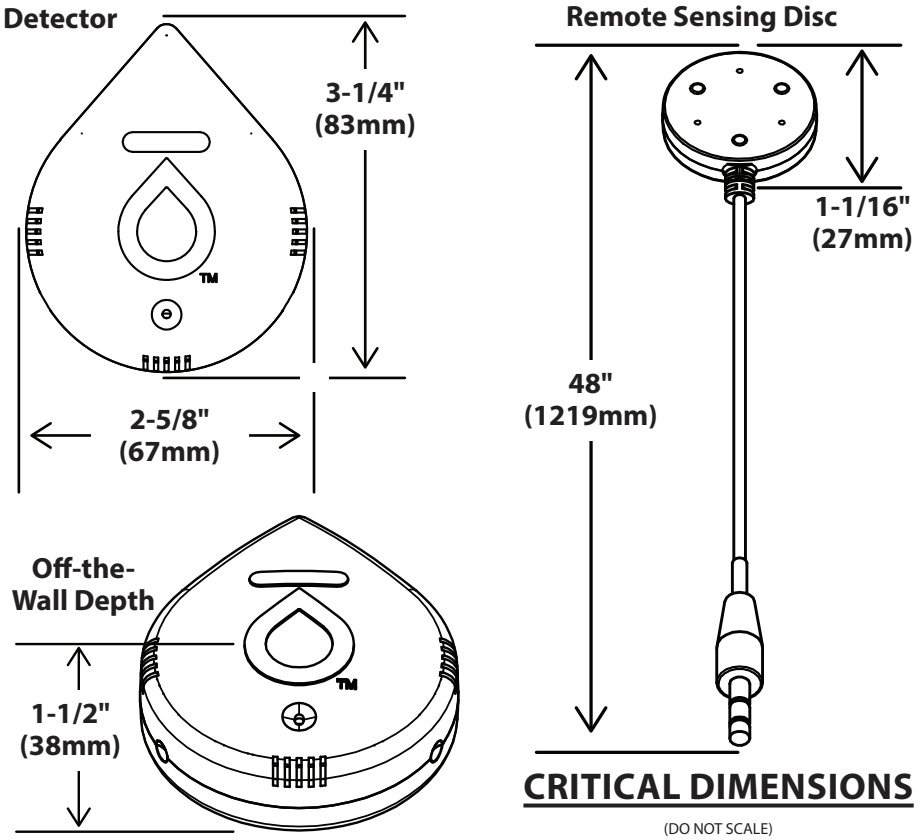


**CRITICAL DIMENSIONS**

(DO NOT SCALE)

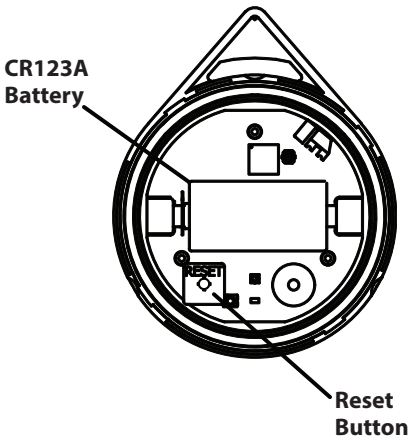


**Included with 920-004 product:**
(1) Smart Water Detector, (1) CR123A Battery, (1) 48" (122cm) Remote Sensing Disc, (1) Wall Mount Base with optional self-adhesive mounting sticker, (2) Wall Mount Screws, (2) Dry Wall Anchors.

**Included with 920-005 product:**
(3) Smart Water Detectors, (3) CR123A Batteries (3) 48" (122cm) Remote Sensing Discs, (3) Wall Mount Base with optional self-adhesive mounting stickers, (6) Wall Mount Screws, (6) Dry Wall Anchors.



**FOR MORE INFORMATION CALL: 1800 354 635**
**www.watersecureco.com.au**

04/23/2020 SPC16265
Released 00